第九章 附录

配件选用

品名	型号	备注
DIN RAIL	DR01	参考 9-2
远方控制器(不含线组)	RC-01	线组必须具屏蔽效果
EMI CORE (22*14*8)	CTC221408A	依客户配线线径选用
EMI CORE (31*19*13)	CTC311913A	依客户配线线径选用
EMI CORE (51*31*13)	CTC513113B	依客户配线线径选用
EMI CORE (68*44*13.5)	CTC684413B	依客户配线线径选用

轨道背板 Din Rail-DR01

Units: mm

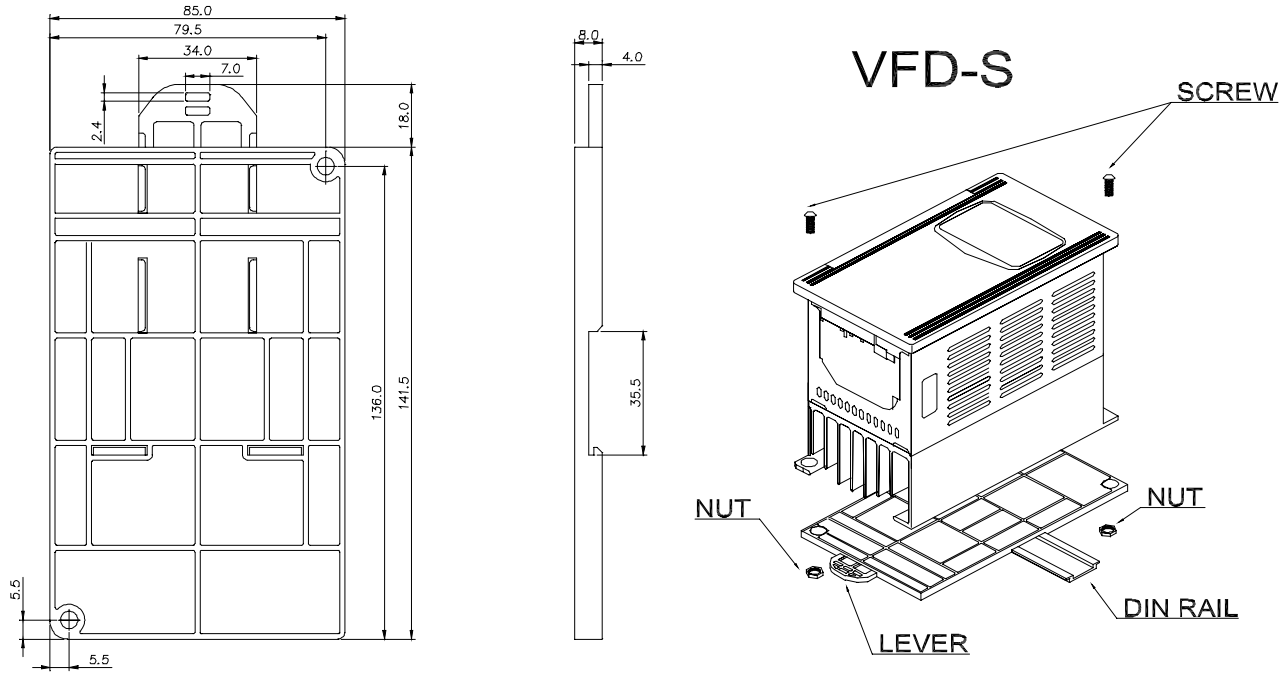

Models	Screw Size
VFD002S11A/B	M4*22
VFD002S21A/B/E	M4*22
VFD002S23A/B	M4*22
VFD004S11A/B	M4*12
VFD004S21A/B/E	M4*12

VFD004S23A/B	M4*12
VFD004S43A/B/E	M4*12
VFD007S21A/B/E	M4*12
VFD007S23A/B	M4*12
VFD007S43A/B/E	M4*12
VFD015S23D	M4*12

接线架 **BK-S**

Unit: mm

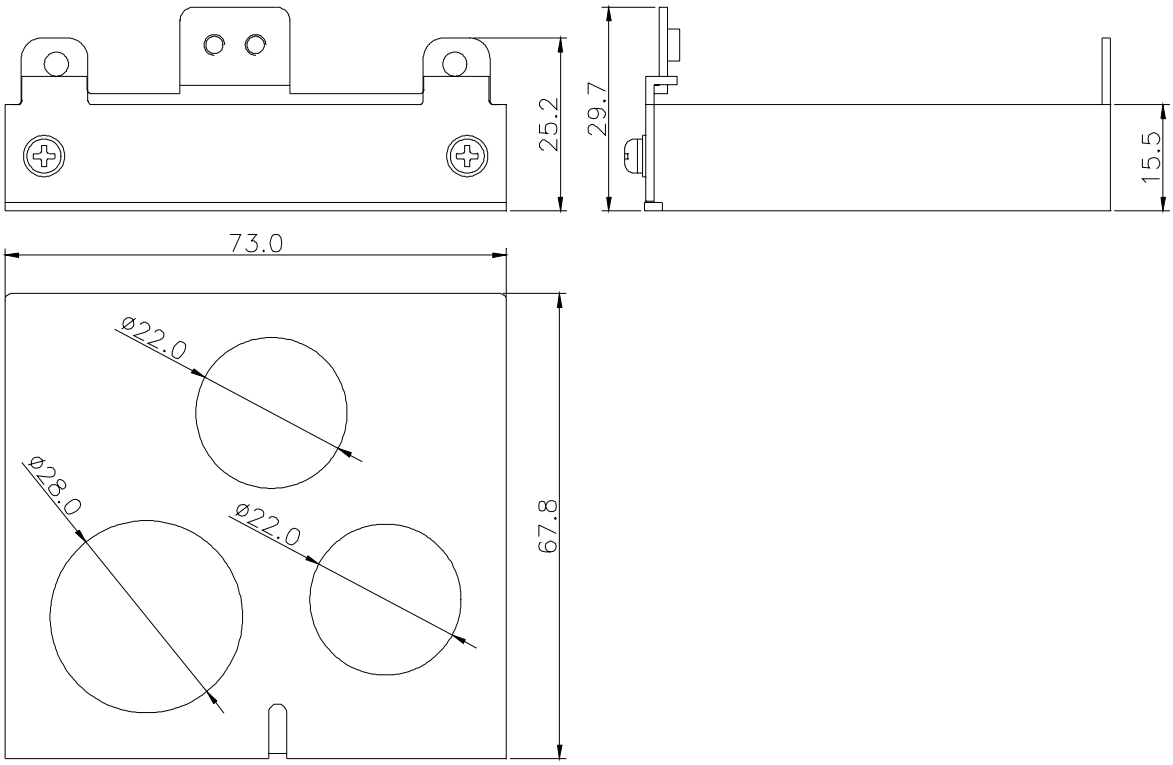

远方控制器 **RC-01**

Unit: mm

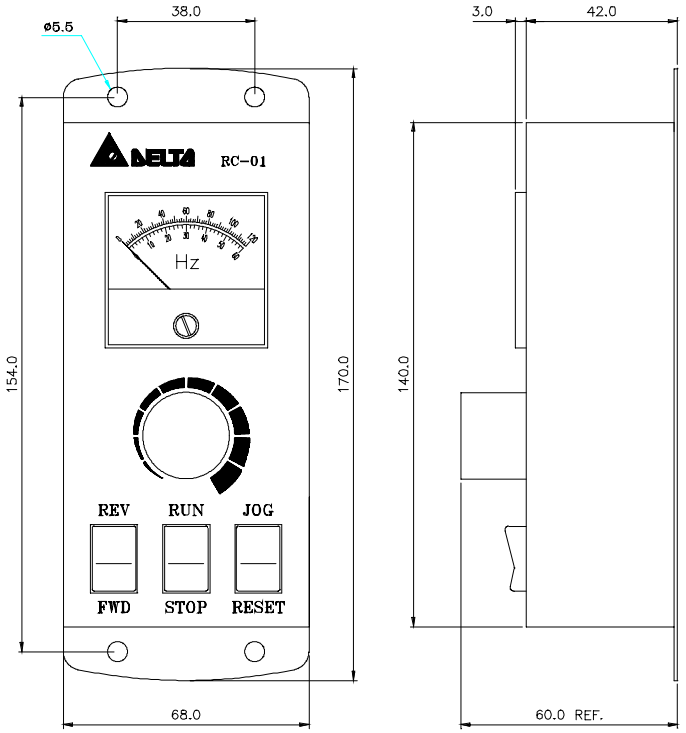

煞车电阻

电 压	适用电机		全载输出转矩 kGF-M	应用电阻规格	制动电阻料号	用量	制动转矩 10%ED %	最小电阻值
	HP 4 极	kW						
115V/ 230V	1/4	0.25	0.110	80W 200Ω	BR080W200	1	400	
	1/2	0.5	0.216	80W 200Ω	BR080W200	1	220	
	1	0.75	0.427	80W 200Ω	BR080W200	1	125	80Ω
	2	1.5	0.849	300W 100Ω	BR300W100	1	125	55Ω
	3	2.2	1.262	300W 70Ω	BR300W070	1	125	35Ω
460V	1/2	0.5	0.216	80W 750Ω	BR080W750	1	230	
	1	0.75	0.427	80W 750Ω	BR080W750	1	125	260Ω
	2	1.5	0.849	300W 400Ω	BR300W400	1	125	190Ω
	3	2.2	1.262	300W 250Ω	BR300W250	1	125	145Ω

煞车电阻尺寸

Unit: mm (inch)

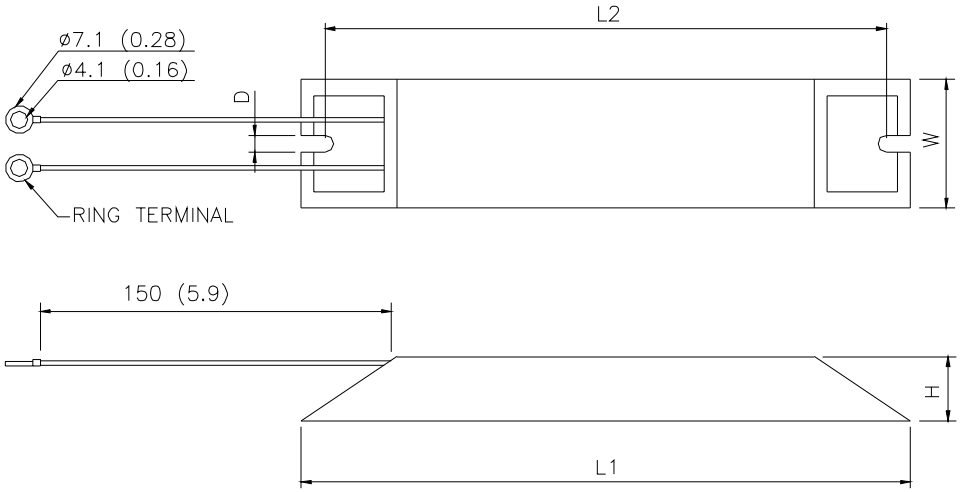

TYPE	L1	L2	H	D	W	MAX. WEIGHT (g)
MVR200W120	165	150	20	5.3	40	240
MVR400W120	165	150	20	5.3	40	240
BR080W200	140	125	20	5.3	60	160
BR080W750	140	125	20	5.3	60	160
BR300W070	215	200	30	5.3	60	750
BR300W100	215	200	30	5.3	60	750
BR300W250	215	200	30	5.3	60	750
BR300W400	215	200	30	5.3	60	750

Unit: mm (inch)

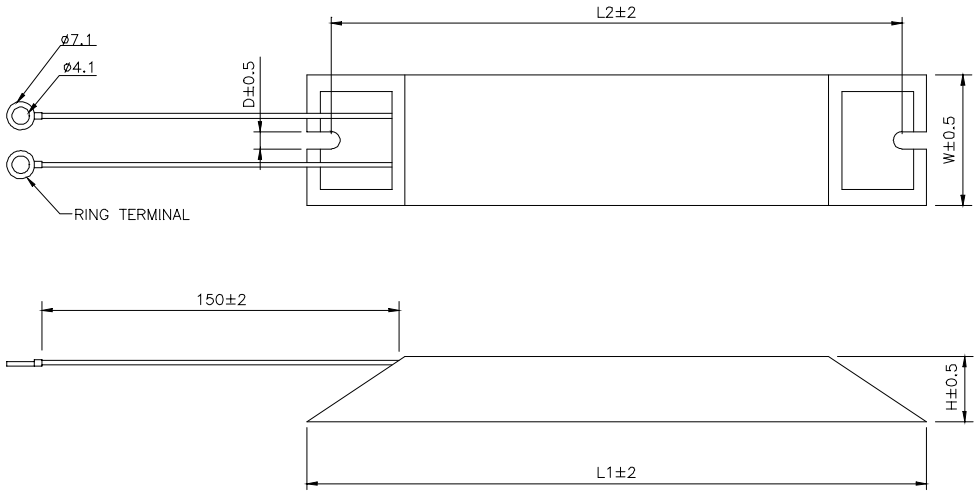

TYPE	L1	L2	H	A	B	MAX. WEIGHT (g)
MVR080W120	165	150	40	8.0	12.0	240

适用电磁干扰滤波器一览表

VFD-S 系列交流电机驱动器之 CE 自我宣告乃配合台达生产之电磁干扰滤波器 (EMI Filter) 完成。交流电机驱动器与适用电磁干扰滤波器之对照关系如下表所示：

机　种	电磁干扰滤波器输入端机型
VFD002S21A/E, VFD004S21A/E, VFD007S21A/E	RF007S21AA
VFD015S21D/E, VFD022S21/D/E	RF022S21BA
VFD004S43A, VFD007S43A	RF007S43AA
VFD015S43A, VFD022S43A	RF022S43BA
VFD002S11A, VFD004S11A	12DKT1W3S
VFD002S23A, VFD004S23A, VFD007S23A	08TDT1W4S
VFD007S11A, VFD015S21A	22DRT1W3S
VFD015S23A, VFD022S23A	20TDT1W4S
VFD022S21A	35DRT1W3C

EMI Filter (RF007S21AA/ RF007S43AA)

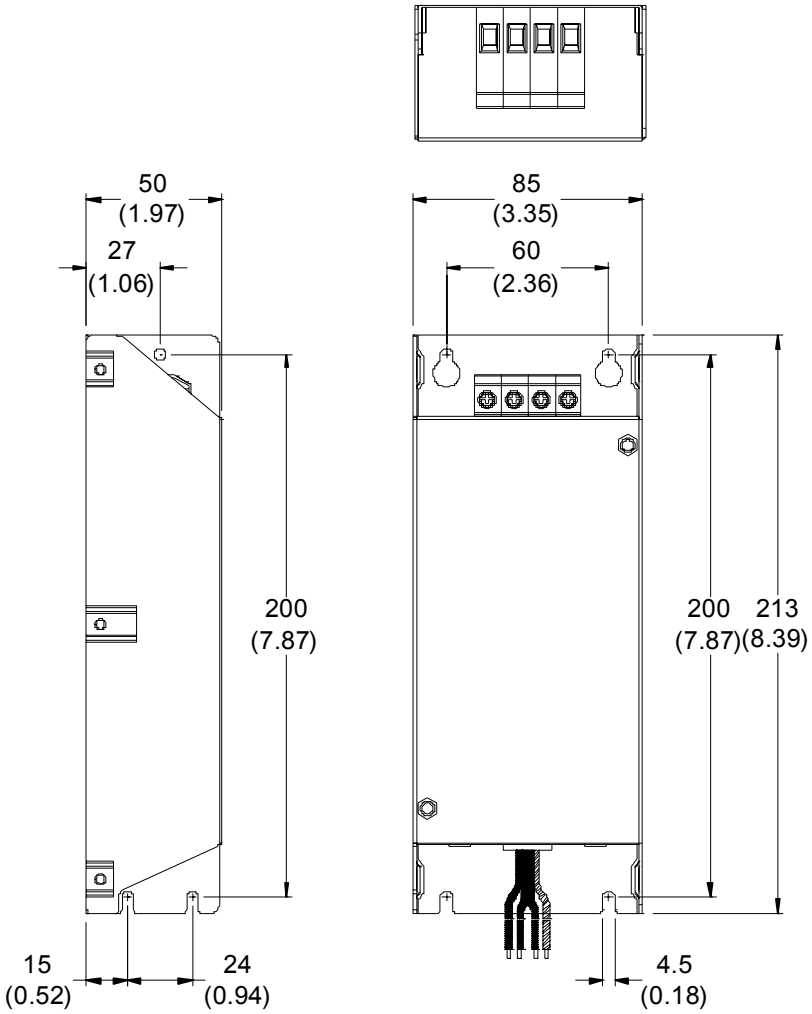

EMI Filter (RF022S21BA / RF022S43BA)

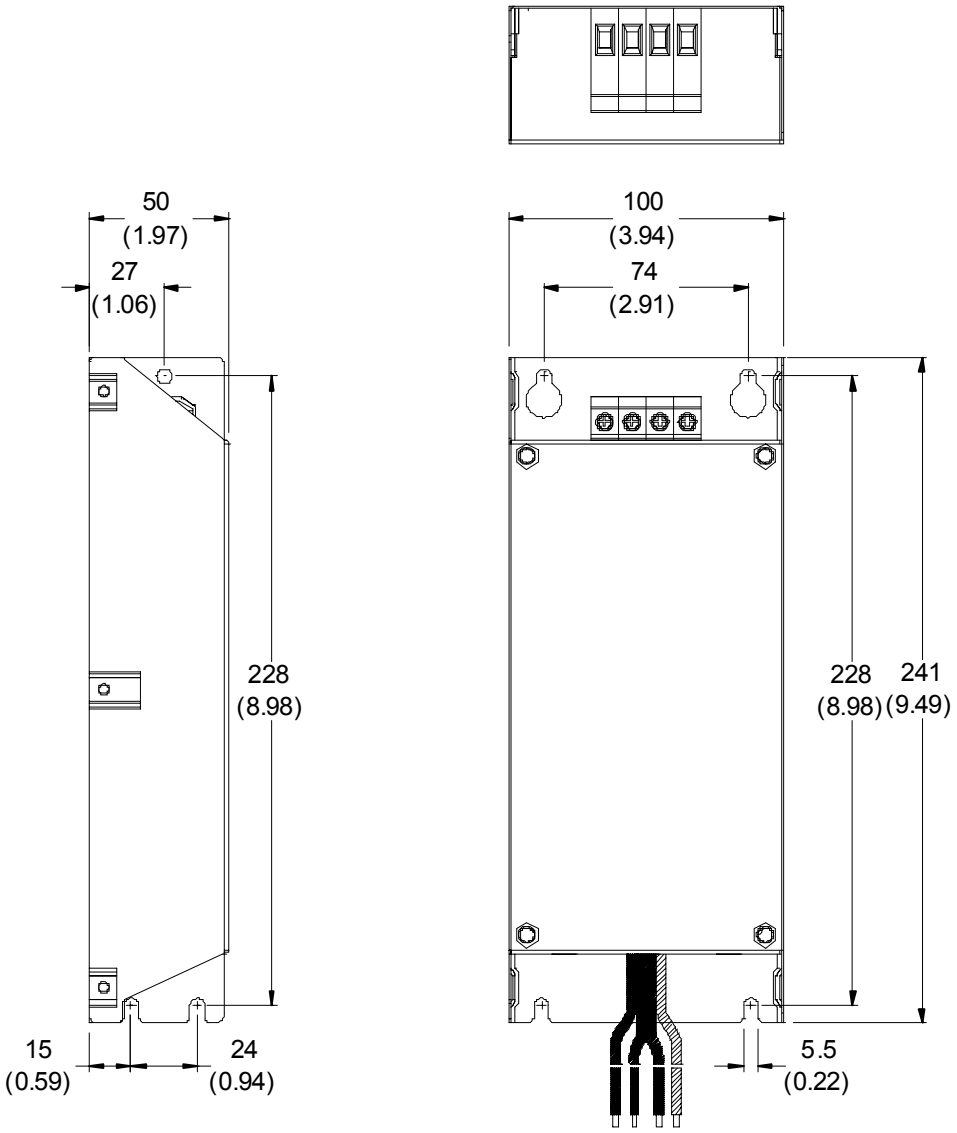

第九章

EMI Filter (12DKT1W3S)

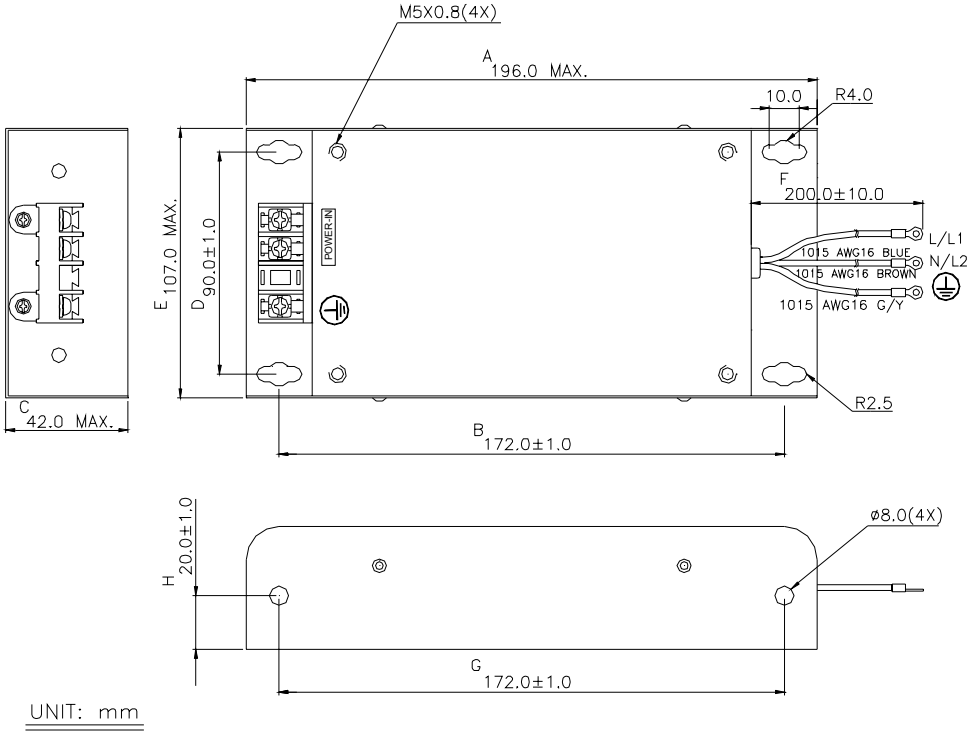

EMI Filter (08TDT1W4S)

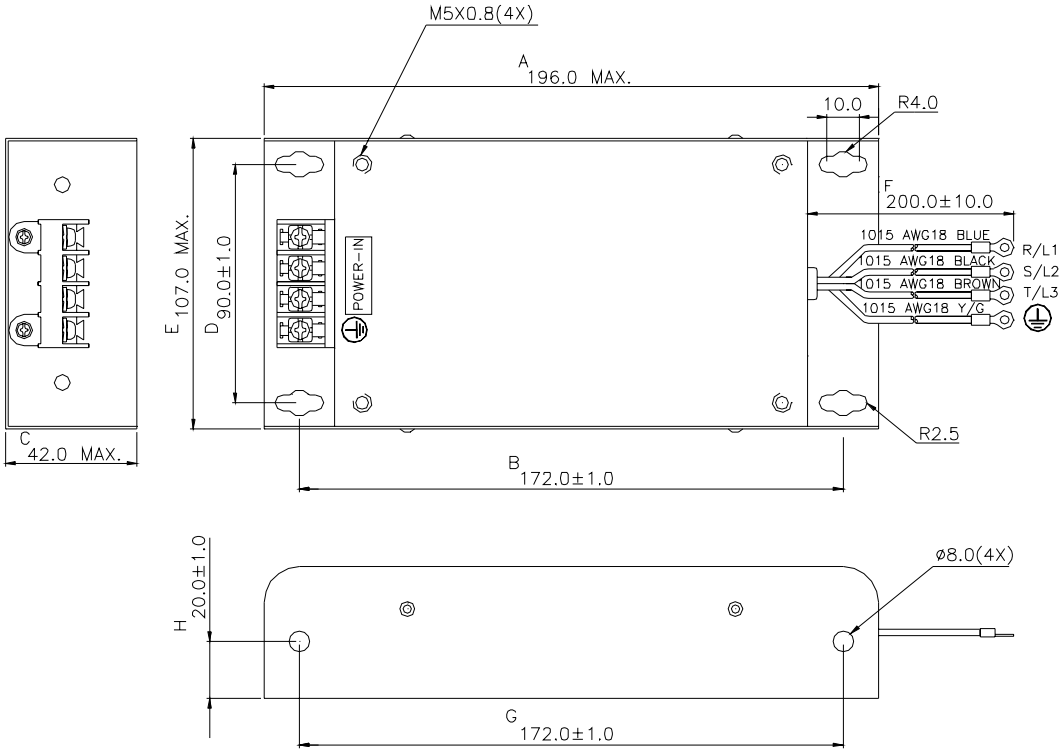

EMI Filter (22DRT1W3S)

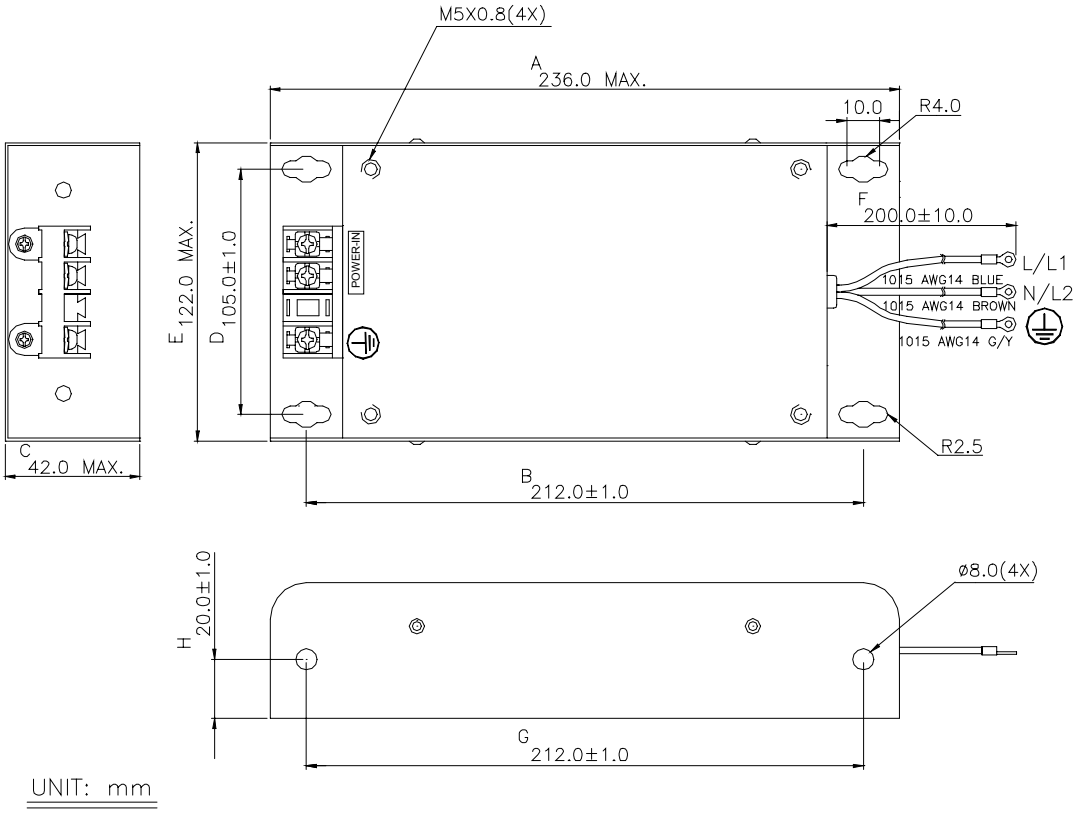

EMI Filter (20TDT1W4S)

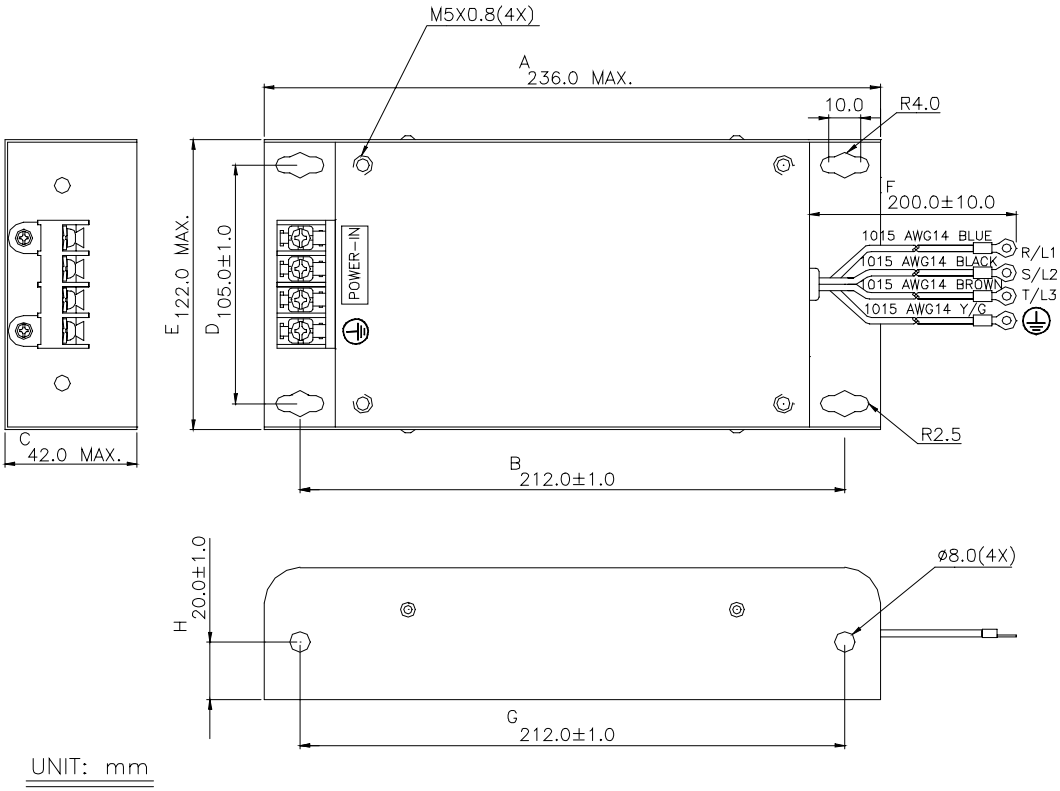

第九章

EMI Filter (35DRT1W3C)

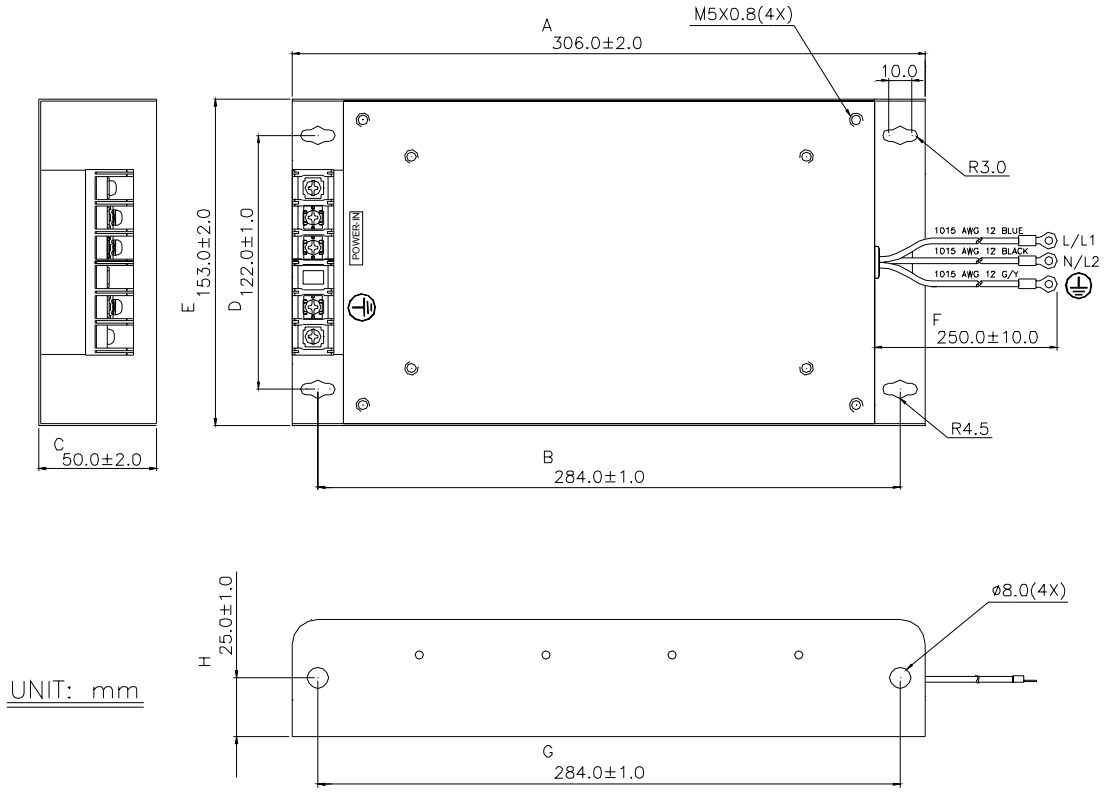

若您欲配合台达生产之电磁干扰滤波器来使用交流电机驱动器，可由上表得知适用之电磁干扰滤波器输入端及输出端机型。

注：若交流电机驱动器的安装环境中，有对电磁干扰较为敏感的仪器设备时，建议於驱动器输出侧加装 Cores，其型号、数量及绕线圈数请参阅上表所示。

Cores	μi	Core Size
CTC633826A	5000	65X38X26
CTC513113A	10000	51X31X13
CTC684413B	5500	68X44X13
BTC604018B	5500	60X40X18

零相电抗器 (RF220X00A)

RF220X00A UNIT: mm(inch)

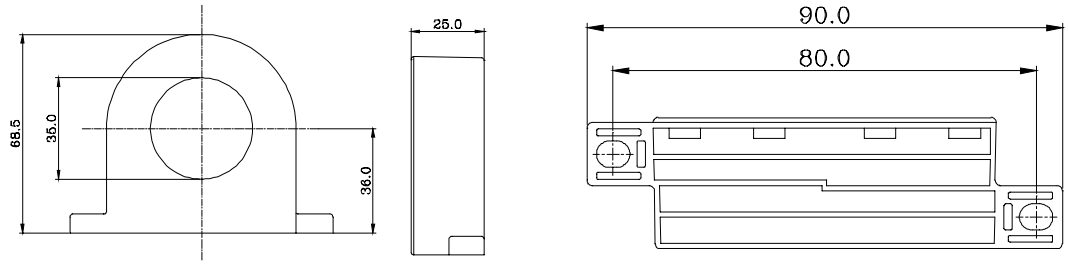

Cable type (**Note**)	Recommended Wire Size			Qty	Wiring Method
	AWG	mm^2	Nominal (mm2)		
Single-core	≦10	≦5.3	≦5.5	1	Diagram A
	≦2	≦33.6	≦38	4	Diagram B
Three-core	≦12	≦3.3	≦3.5	1	Diagram A
	≦1	≦42.4	≦50	4	Diagram B

Note: **600V** 缘电力线.

Diagram A

每一条线在穿过零相电抗器处需绕四次. 此电抗器需尽可能的靠近变频器端.

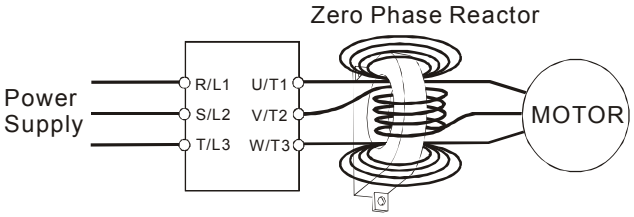

Diagram B

请将线直接穿过并排的四个零相电抗器.

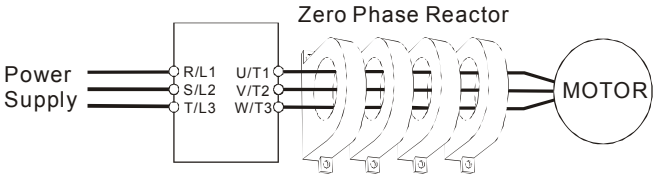

注 1: 上述表格仅供参考，选用时请用合适之缆线种类及直径大小；亦即缆线必须适於穿过零相电抗器的中心。

注 2: 配线时，请勿穿过地线，只需穿过电机线或电源线。

注 3: 当使用长的电机输出线时，可能需使用零相电抗器以减低辐射。

DELTA ELECTRONICS,INC.

EC Declaration of Conformity

according to the Low Voltage Directive 73/23/EEC and the Amendment Directive 93/68/EEC

For the following equipment:

AC Motor Drive

(Product Name)

VFD002S11A/B,VFD004S11A/B,VFD007S11A/B,VFD015S21A/B,VFD015S23A/B
VFD002S21A/B,VFD002S23A/B,VFD004S21A/B,VFD004S23A/B,VFD004S43A/B,VFD007S21A/B,VFD007S23A/B,VFD007S43A/B
VFD015S23A/B,VFD015S43A/B,VFD022S21A/B,VFD022S23A/B,VFD022S43A/B

(Model Name)

is herewith confirmed to comply with the requirements set out in the Council Directive 73/23/EEC for electrical equipment used within certain voltage limits and the Amendment Directive 93/68/EEC. For the evaluation of the compliance with this Directive, the following standard was applied:

EN 50178

The following manufacturer/importer is responsible for this declaration:

Delta Electronics, Inc.

(Company Name)

DELTA ELECTRONICS,INC.

EC Declaration of Conformity

according to the Electromagnetic Compatibility 89/336/EEC and the Amendment Directive 93/68/EEC

For the following equipment:

AC Motor Drive

(Product Name)

VFD002S11A/B,VFD004S11A/B,VFD007S11A/B,VFD015S21A/B,VFD015S23A/B
VFD002S21A/B,VFD002S23A/B,VFD004S21A/B,VFD004S23A/B,VFD004S43A/B,VFD007S21A/B,VFD007S23A/B,VFD007S43A/B
VFD015S23A/B,VFD015S43A/B,VFD022S21A/B,VFD022S23A/B,VFD022S43A/B

(Model Designation)

is herewith confirmed to comply with the requirements set out in the Council Directive 89/336/EEC for electromagnetic compatibility and the Amendment Directive 93/68/EEC. For the evaluation of the compliance with this Directive, the following standard was applied:

EN61800-3,EN50081-2,EN50082-2,EN55011,EN61000-4-2, EN61000-4-3, EN61000-4-4
EN61000-4-5, EN61000-4-6

The following manufacturer/importer is responsible for this declaration:

Delta Electronics, Inc.

(Company Name)

第九章